SIP, SDP, and RTP Interop Issues

David Hiers

SIPNOC 2011

www.voiceops.org

- Email list for operators of voice networks
  - TDM suite
  - IP suite
  - Whatever comes next!
- Technical, operational, interop, etc
- Free, non-commercial, no solicitation
- Started July 2009, over 750 members

Case Studies

- PART 1
  - Time Warp
- PART 2
  - Past is Prologue
  - Conservation Hurts

Recorder Topology/Overview

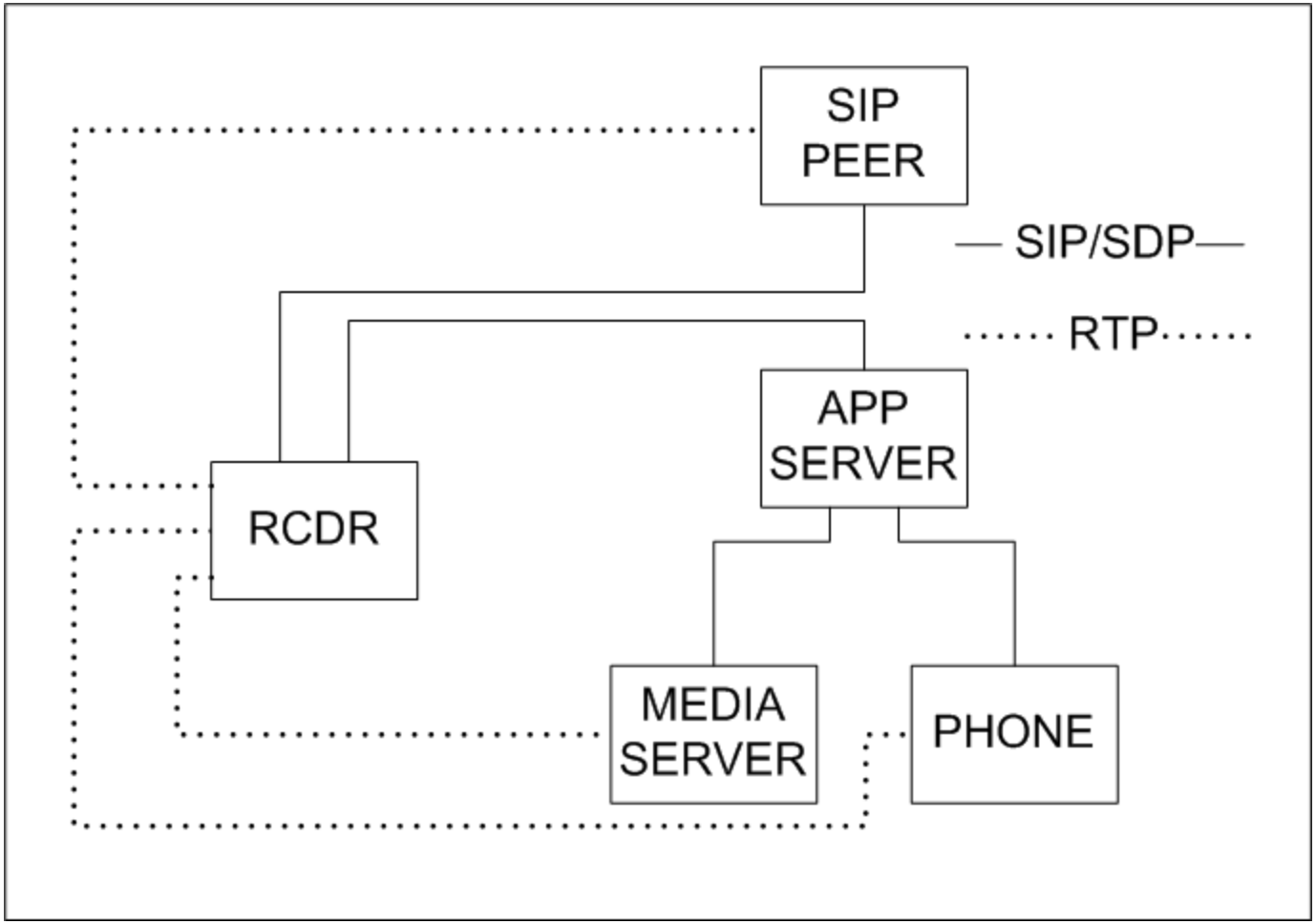

Case 1: Time Warp

SIP Ladder: OK

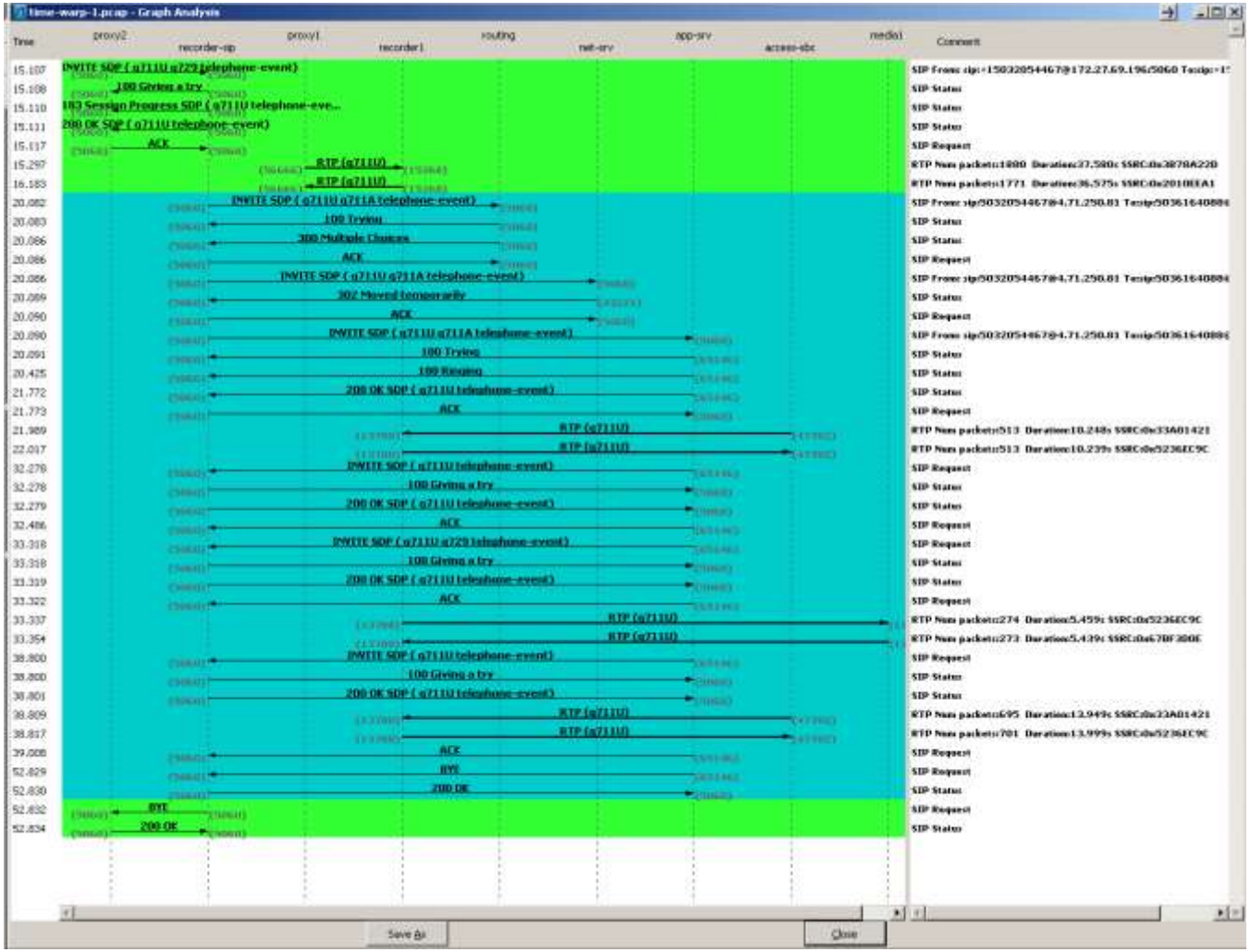

Case 1: Time Warp

RTP Streams: One-way stats OK

Wireshark: RTP Streams

Detected 6 RTP streams. Choose one for forward and reverse direction for analysis

Src IP addr	Src p	Dest IP addr	Dest p	SSRC	Payload	Packets	Lost	Max Delta (ms)	Max Jitter (ms)	Mean Jitter (ms)	Pb?
proxy1	5	recorder1	2	0x3B78A22D	ITU-T G.711	1880	0 (0.0%)	26.81	0000000000000000.00	0000000000.00	X
recorder1	2	proxy1	5	0x2010EEA1	ITU-T G.711	1771	0 (0.0%)	70.58	0000000000000000.00	0000000000.00	X
access-sbc	7	recorder1	7	[illegible]	[illegible]	[illegible]	[illegible]	[illegible]	0000000000000000.00	0000000000.00	X
recorder1	7	access-sbc	7	[illegible]	[illegible]	[illegible]	[illegible]	[illegible]	0000000000000000.00	0000000000.00	X
recorder1	7	media1	7	[illegible]	[illegible]	[illegible]	[illegible]	[illegible]	0000000000000000.00	0000000000.00	X
media1	7	recorder1	7	0x67BF3D0E	ITU-T G.711	273	0 (0.0%)	20.59	0000000000000000.00	0000000000.00	X

One-way stream

Select a forward stream with left mouse button
Select a reverse stream with SHIFT + left mouse button

Unselect | Find Reverse | Save As | Mark Packets | Prepare Filter | Copy | Analyze | Close

All zeros for jitter?
Sure, we've got a good network,
but this is not reasonable.
Bug in wireshark?

Stream Analysis: Potential trouble?

Wireshark: RTP Stream Analysis

Forward Direction | Reversed Direction

Analysing stream from recorder1 port 15268 to proxy1 port 56666 SSRC = 0x2010EEA1

Packet	Sequence	Delta(ms)	Filtered Jitter(ms)	Skew(ms)	IP BW(kbps)	Marker	Status
798	40922	19.99	0.38	-16.18	80.00		[Ok]
800	40923	17.99	0.48	-14.18	81.60		[Ok]
802	40924	19.99	0.46	-14.16	81.60		[Ok]
804	40925	19.99	0.43	-14.15	81.60		[Ok]
806	40926	20.11	0.41	-14.26	80.00		[Ok]
809	40927	20.01	0.38	-14.27	80.00		[Ok]
813	40928	11.41	7536.90	120570.32	81.60		[Ok]
817	40929	22.19	7065.98	120568.13	81.60		[Ok]
821	40930	17.61	6624.50	120570.52	81.60		[Ok]
825	40931	19.61	6210.50	120570.91	81.60		[Ok]
829	40932	19.37	5822.38	120571.55	81.60		[Ok]
833	40933	20.99	5458.54	120570.55	81.60		[Ok]
839	40934	29.23	5117.96	120561.33	81.60		[Ok]
841	40935	20.36	4798.11	120560.97	81.60		[Ok]

Interesting! But is it actually relevant?

Save payload... | Save as CSV... | Refresh | Jump to | Graph | Next non-Ok | Close

Case 1: Time Warp

Packets show potential problem

Observed, not calculated: trustworthy

No.					
7				0EEA1, Seq=40922,	Time=45760
800	recorder1	proxy1	PT=ITU-T G.711 PCMU,	SSRC=0x2010EEA1, Seq=40923,	Time=45920
802	recorder1	proxy1	PT=ITU-T G.711 PCMU,	SSRC=0x2010EEA1, Seq=40924,	Time=46080
804	recorder1	proxy1	PT=ITU-T G.711 PCMU,	SSRC=0x2010EEA1, Seq=40925,	Time=46240
806	recorder1	proxy1	PT=ITU-T G.711 PCMU,	SSRC=0x2010EEA1, Seq=40926,	Time=46400
809	recorder1	proxy1	PT=ITU-T G.711 PCMU,	SSRC=0x2010EEA1, Seq=40927,	Time=46560
813	recorder1	proxy1	PT=ITU-T G.711 PCMU,	SSRC=0x2010EEA1, Seq=40928,	Time=1011328
817	recorder1	proxy1	PT=ITU-T G.711 PCMU,	SSRC=0x2010EEA1, Seq=40929,	Time=1011488
821	recorder1	proxy1	PT=ITU-T G.711 PCMU,	SSRC=0x2010EEA1, Seq=40930,	Time=1011648
825	recorder1	proxy1	PT=ITU-T G.711 PCMU,	SSRC=0x2010EEA1, Seq=40931,	Time=1011808
829	recorder1	proxy1	PT=ITU-T G.711 PCMU,	SSRC=0x2010EEA1, Seq=40932,	Time=1011968
833	recorder1	proxy1	PT=ITU-T G.711 PCMU,	SSRC=0x2010EEA1, Seq=40933,	Time=1012128
839				934,	Time=1012288

Start of one-way audio: what caused it?
Strong association with TIMESTAMP

Timestamp Definition

- RFC 3550 – RTP
- 5.1 RTP Fixed Header Fields
  - The timestamp reflects the sampling instant of the first octet in the RTP data packet. The sampling instant MUST be derived from a clock that increments monotonically and linearly in time...
  - The initial value of the timestamp SHOULD be random...

Timestamp Discontinuity Breaks Audio

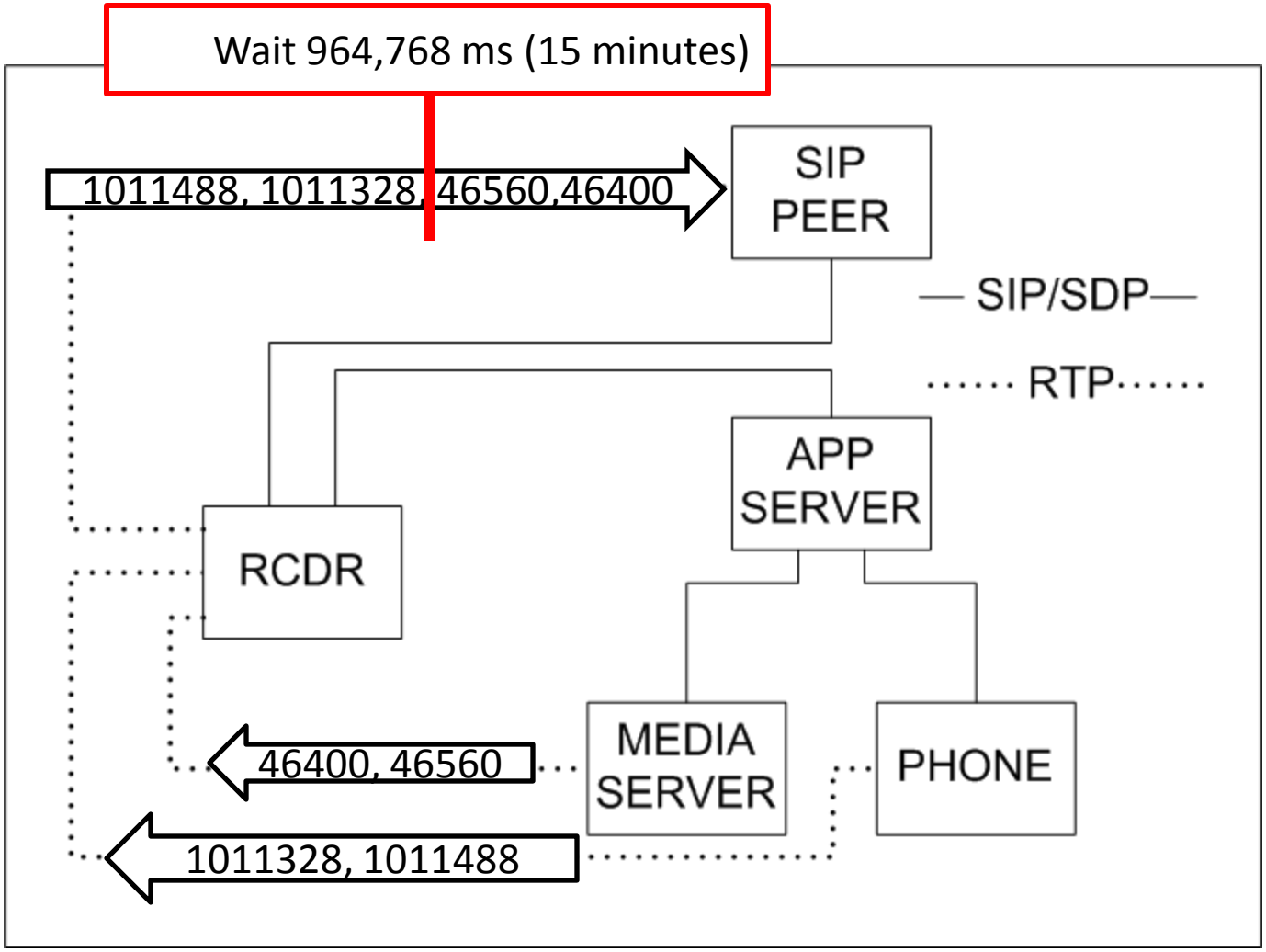

Case 1: Time Warp

Analysis and Resolution

- Recorder failed to implement RFC
- Wireshark player failed to enforce RFC
- Peer’s old GWs failed to enforce RFC
- Peer started rolling upgrade of GWs
- Peer’s new GWs enforced RFC, esp TIMESTAMP
- Calls that connected to new GWs failed while old GWs continued to work
- Calls with small jumps continued to work
- Resolution: Recorder normalized TIMESTAMP

Summary

- Mutually supporting defects exist
- Behavioral tests are not completely trustworthy
- Must ensure that things work for the right reasons